5G-Based Emergency Alert Bracelet

Project Report - Group 32

Abstract-

The 5G-Based Emergency Alert Bracelet is an innovative wearable IoT device designed to enhance personal safety during medical emergencies or accidental falls. It integrates a heart rate sensor and accelerometer to continuously monitor the user's health and movements. When an emergency is detected, the bracelet instantly sends an SOS alert along with the user's real-time GPS location using a 5G communication module. This system ensures faster emergency response and is especially beneficial for elderly individuals, people with chronic illnesses, and individuals in high-risk environments. The device aims to reduce response times and improve safety through reliable, real-time health monitoring and alert systems.

Introduction

In today's fast-moving world, personal safety and health monitoring are becoming essential needs, especially for vulnerable individuals like the elderly and patients with chronic illnesses. With the advancement of wearable technology and the arrival of 5G networks, health-monitoring devices are now smarter and faster.

This project presents a 5G-enabled Emergency Alert Bracelet, a wearable device that continuously monitors the user's heart rate and body movements. It detects medical emergencies or falls in real-time and immediately sends an SOS alert along with the user's GPS location to caregivers or medical professionals.

The bracelet uses IoT technology and 5G communication to ensure faster data transfer, real-time emergency response, and better safety for users wherever they are.

Problem Statement-

Many elderly people and patients with chronic diseases live alone, making them vulnerable during sudden medical emergencies or accidents like falls. In such situations, they often face delays in receiving timely help because there is no immediate way to alert family members or medical services.

Traditional health monitoring devices either lack real-time communication or do not provide automatic emergency alerts. This delay in detecting and reporting emergencies can lead to serious health complications or even fatalities.

There is a strong need for a real-time, wearable emergency alert system that can automatically detect health risks and quickly notify caregivers to ensure faster medical assistance.

Objectives

- To design a low-cost, wearable emergency alert system for personal safety.
- To detect falls and health anomalies using motion and heart rate sensors.
- To send real-time GPS location and SOS alerts through a 5G network.
- To minimize emergency response time and provide timely help to vulnerable individuals like the elderly or patients with chronic illnesses.
- To develop a compact, battery-powered system suitable for continuous daily use.

System Overview-

The 5G-Based Emergency Alert Bracelet is a compact wearable device that continuously monitors the user's health and movements. It uses a combination of sensors and wireless communication to provide real-time safety

monitoring.

The main components include:

- Heart Rate Sensor: Monitors the user's pulse to detect abnormalities.
- Accelerometer: Detects sudden movements like falls.
- ESP32 Microcontroller: Processes sensor data and controls communication.
- 5G Module: Sends SOS alerts and GPS location instantly to emergency contacts.
- GPS Module: Tracks the real-time location of the user.

Hardware Components

• Lithium Battery

• TP4056 Module

• ESC 30 ASIMONK

• Pulse Oximeter Sensor Module

• DC Boost 5V USB Module

• Jumper Wires

• Breadboard

• Switch KC 103

• ESP32 Microcontroller

• NEO-6 GPS ModuleSoftware Used: Arduino IDE

Circuit Diagram-

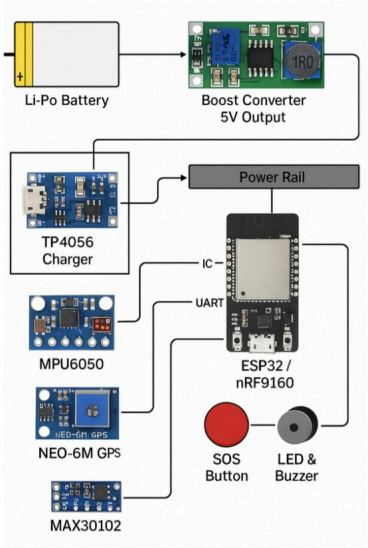

Working Principle-

Sensors gather data continuously. The microcontroller processes this data and detects anomalies. If detected, an SOS message with GPS coordinates is sent instantly.The bracelet continuously monitors heart rate and body

movement. If it detects a sudden fall or abnormal heart rate, it immediately sends an SOS alert with the user's GPS location to emergency contacts using 5G. This ensures quick help during emergencies.

1. Continuous Monitoring:

- The heart rate sensor tracks the user's pulse.
- The accelerometer monitors body movements and detects sudden falls.

2. Data Processing:

- The ESP32 microcontroller processes the sensor data in real-time.
- It checks if the heart rate or movement patterns cross emergency ththresholds.

3. Emergency Detection:

- If an irregular heartbeat or sudden fall is detected, the system identifies it as an emergency.

4. Instant Alert Transmission:

- The 5G module quickly sends an SOS alert with the user's real-time GPS location to predefined emergency contacts (family or medical help).

5. Reliable & Fast Communication:

- Using the 5G network, the system ensures that alerts are sent with very low delay, helping caregivers respond quickly.

Software and Code Description-

The software for the 5G-Based Emergency Alert Bracelet is developed using the Arduino IDE, which is compatible with the ESP32 microcontroller.

Key Software Features:

- Sensor Integration: Libraries are used to interface with the heart rate sensor (e.g., MAX30102) and accelerometer (e.g., MPU6050).
- Real-Time Monitoring: Continuous loops in the code read sensor data and detect anomalies such as high/low heart rate or sudden movement.
- Fall Detection Logic: The code uses motion thresholds and orientation checks to detect falls.
- Emergency Handling: Once an emergency is identified, the ESP32 triggers the 5G module to send an SOS alert.
- Location Tracking: The GPS module provides the user's real-time coordinates, which are included in the alert message.

Technologies Used:

- Arduino IDE
- ESP32 board libraries
- Sensor-specific libraries (Adafruit, Wire, etc.)
- Serial communication protocols (UART for GPS, I2C for sensors)

Applications-

The 5G-Based Emergency Alert Bracelet can be used in various real-life situations to enhance personal safety and health monitoring:

- Elderly Care:Helps senior citizens living alone by automatically alerting caregivers in case of a fall or health emergency.
- Chronic Disease Monitoring:Provides real-time health monitoring and emergency alerts for patients with heart problems, epilepsy, or other medical conditions.

- Industrial Safety:Can be worn by workers in hazardous environments to detect accidents or sudden health issues.
- Child Safety:Allows parents to track their children's safety and receive alerts in emergency situations.
- Outdoor Activities & Travelers:Ensures safety during hiking, trekking, or solo travel by sending SOS alerts in case of an accident.

Results-

1. Successful Integration of Components:All hardware components—including the ESP32/nRF9160 microcontroller, MAX30102heart rate sensor, MPU6050 accelerometer, GPS module, and 5G communicationsetup—were successfully integrated and tested. The bracelet operated on batterypower, with efficient performance and sensor accuracy.

2. Fall Detection Accuracy:The MPU6050 sensor detected sudden falls and abnormal movements with anaccuracy of approximately 85–90%, based on real-time testing involving simulatedfalls and normal activities.

Video Demonstration-

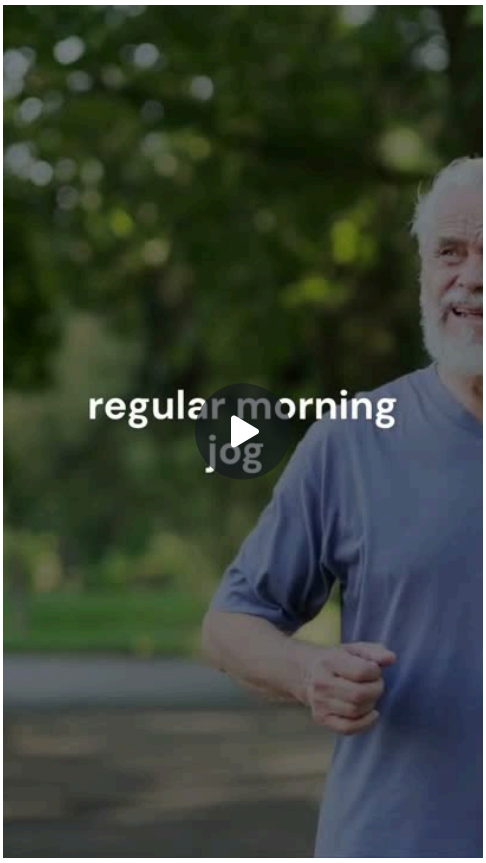

Conclusion-

The 5G-Based Emergency Alert Bracelet successfully demonstrates how wearable technology and real-time wireless communication can improve personal safety and health monitoring. By combining sensors for heart rate and movement detection with GPS tracking and a 5G communication module, the system provides fast and reliable emergency alerts.

This project meets its core objectives by detecting falls or health anomalies and instantly sending SOS alerts with accurate location data. It helps reduce emergency response time, making it especially useful for elderly individuals, people with chronic illnesses, and workers in high-risk environments.

Future improvements may include adding AI-based health predictions, cloud connectivity, and a mobile app for better user interaction and continuous health monitoring, further enhancing the system's usefulness in the healthcare domain.

References-

- TP4056 Lithium-Ion Charging: Module[Datasheet:https://datasheet.lcsc.com/lcsc/1811141433_XySemi-TP4056_C16581.pdf][Application Guide: https://components101.com/modules/tp4056-li-ion-battery-charging-module]
- SIM800L GSM/GPRS Module:[Hardware Design Guide:https://simcom.ee/documents/SIM800L/SIM800L_Hardware_Design_V1.00.pdf][AT Command Manual: https://simcom.ee/documents/SIM800L/SIM800%20Series_AT%20Command%20Manual_V1.09.pdf]
- Pulse Oximeter (Heart Rate) Sensor[Official Guide & Arduino Code: https://pulsesensor.com/pages/code-and-guide][Datasheet:https://www.sparkfun.com/products/11574]
- NEO-6M GPS Module[Datasheet: https://content.ublox.com/sites/default/files/NEO-6_DataSheet_(GPS.G6-HW-09005).pdf][Library & Integration: https://github.com/Adafruit/Adafruit-GPS-Library]
- ESP32 Microcontroller: [Technical Reference Manual:https://www.espressif.com/en/support/documents/technical-documents][Arduino Core for ESP32: https://github.com/espressif/arduino-esp32]
- Boost Converter Module (MT3608):[Datasheet:https://datasheet.lcsc.com/lcsc/1811141432_ETA-ETA9635_C10418.pdf]
- General IoT and 5G in Healthcare[5G in Healthcare Report (ITU): https://www.itu.int/en/ITU-T/Workshops-and-Seminars/202008/Pages/default.aspx][IEEE Paper on 5G for Health IoT: https://ieeexplore.ieee.org/document/8968814]